INFORMATION TABLE

Profile type	Visible element [mm]	Joint width [mm]	Base width [mm]	Installation height [mm]	Material type	Maximum load [kN]	Horizontal/Vertical compensation [mm]
GA 43.10.90& S	83	max 30	240	80	Aluminum, EPDM, steel	90	±30(±15)

CONECTO GA 43.10.90& S
VIEW

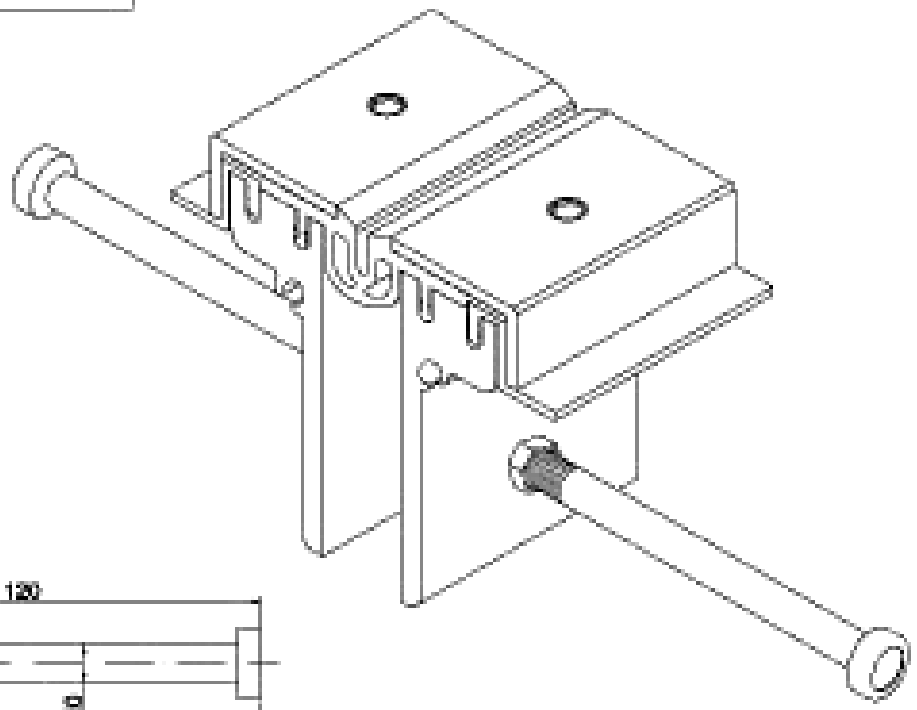

CONECTO GA 43.10.90& S
SECTION

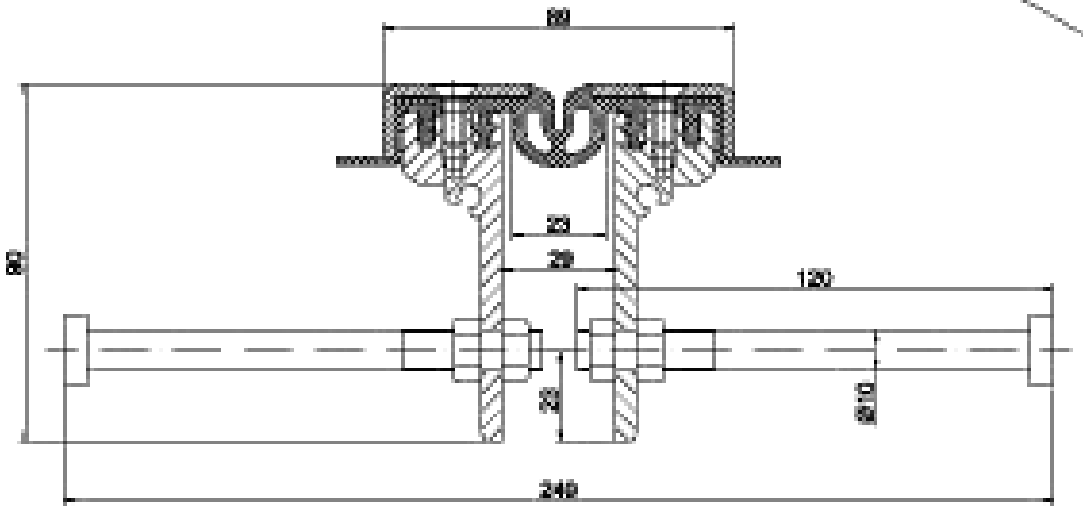

Expansion joint Conecto Park GA 43.10.90& S			LIKUNTASAUMAT.FI	
			www.conecto-profiles.com	conecto
SCALE / SKALA 1:1	Weights and dimensions [kg] / [mm]		—	—