CONECTO OMEGA
03NB-50 h=135
SECTION

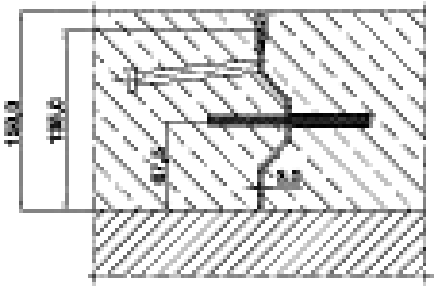

CONECTO OMEGA
03NB-50 h=135
VIEW

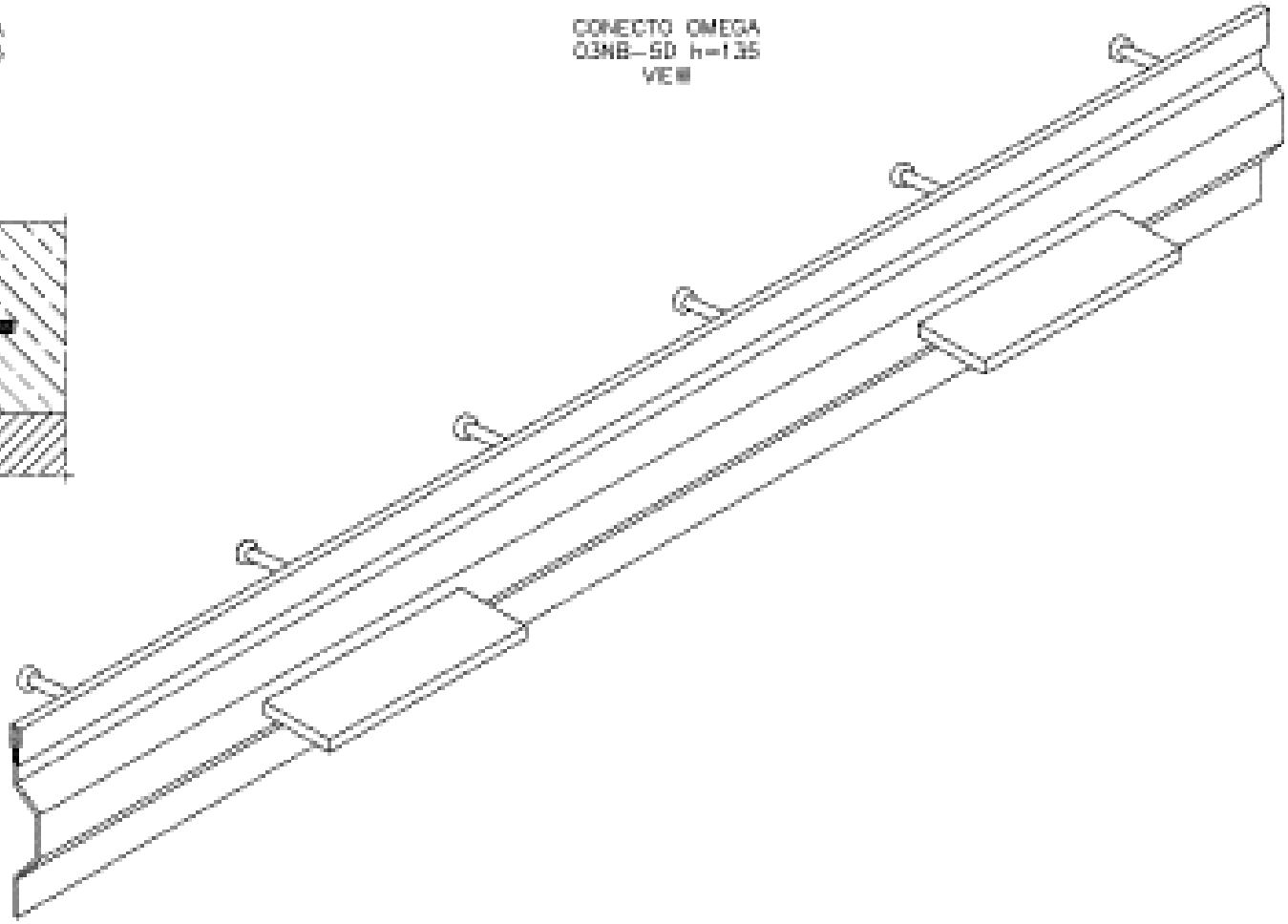

	Expansion Div			
	Antti Vuolteenaho			

Expansion joint Conecto Omega
03NB-50 h=135
L=2990

LIKUNTASAUMAT.FI

www.conecto-profiles.com

conecto

40	1:1		---	---	01	1 / 1	